POS.	AxB	H
1	600x600	100

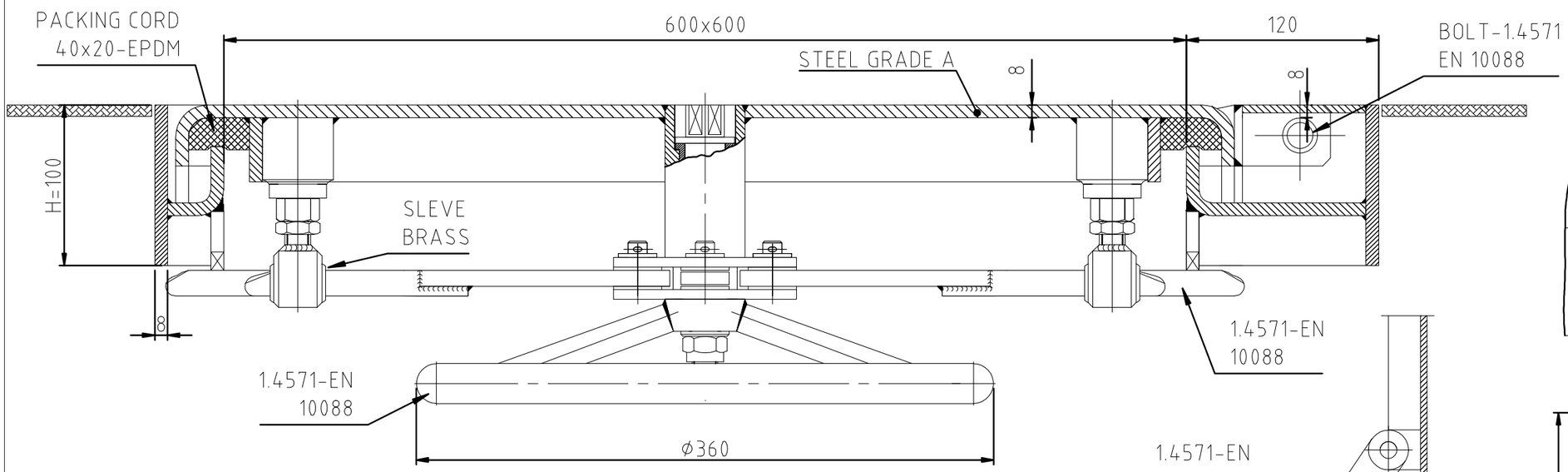

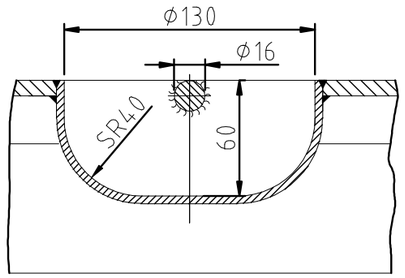

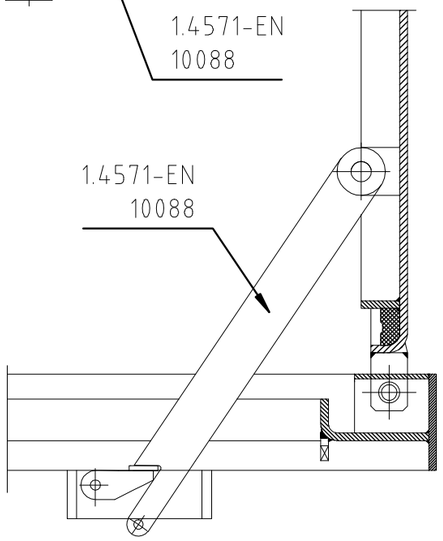

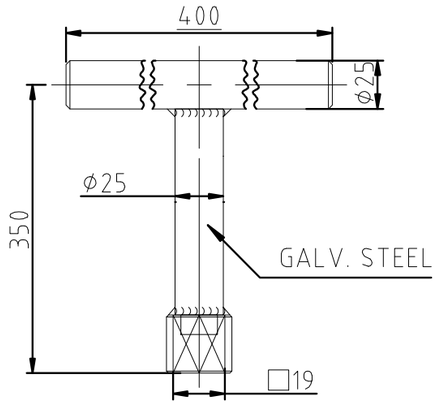

HOLE IN PLATE

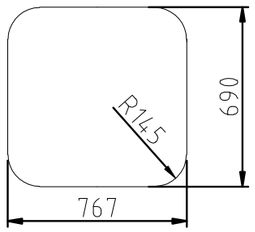

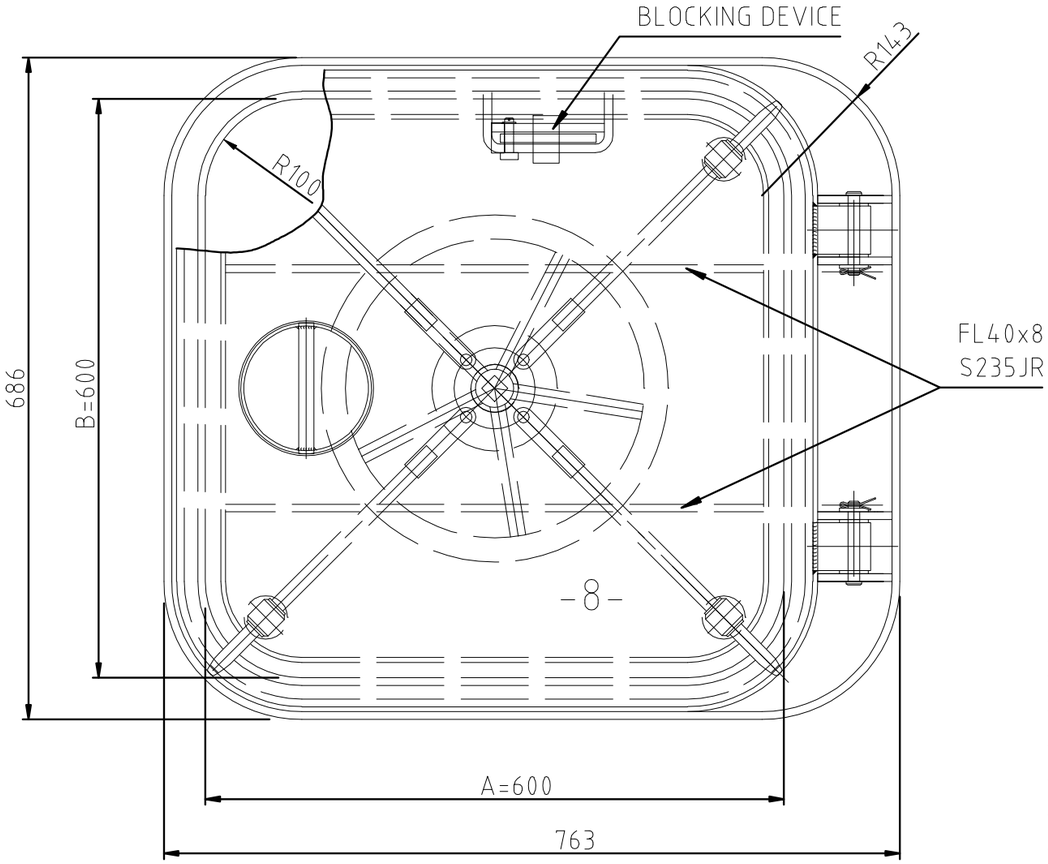

PAINTING:
SIGMAWELD MC 7177-20microns
THE GUTTER UNDER SEALING PAINTED POLYURETHANE PAINT (WHITE COLOUR)
ST. STEEL ELEMENTS AND GALV. STEEL -NOT PAINTED

DEVIATION AMOUNTS OF FREE DIMENSIONS (INTOLERATED) ACC. TO ISO-DIN 2768 -CLASS "C"

	NAME	SIGNATURE	DATE
DESIGNER	S. Pertek		10.12.2009
DREW BY	S. Pertek		10.12.2009
CHECKING	Z. Szuta		10.12.2009
NORMALIZER	J.Pawłowski		10.12.2009
APPROVED	M.Sommerfeld		10.12.2009

GCDB Rechflota

ARTICLE

FLUSH STEEL HATCH 600 x 600

SCALL

MEBLOMOR S.A.
BIURO KONSTRUKCYJNE
ul.Kościuszki 75 64-700 Czarnków

MASS (kg)

ARCHIVAL NO

DGR NO N19/34.8201

D:\TKT4Stacha\Oferty\Włazy\8201

SHEET 1

SHEETS 1